DS-2CD6D54G1-IZ(S)
EXIR Flexible PanoVu Network Camera

- 1/2.7" Progressive Scan CMOS
- 2560 x 1920 @ 25fps
- H.265, H.264, H.265+, H.264+
- Up to 30m IR range
- 4 Flexible lens
- 120dB WDR
- IP67, IK10

DORI

The DORI (detect, observe, recognize, identify) distance gives the general idea of the camera ability to distinguish persons or objects within its field of view. It is calculated based on the camera sensor specification and the criteria given by EN 62676-4: 2015.

DORI	Detect	Observe	Recognize	Identify
Distance (Wide)	60 m	23 m	12 m	6 m
Distance (Tele)	120 m	47 m	24 m	12 m

Specifications

Camera	
Image Sensor	1/2.7" Progressive Scan CMOS
Min. Illumination	Color: 0.0125 Lux @ (F1.9, AGC ON); B/W: 0.0025 Lux @ (F1.9, AGC ON)
Shutter Speed	1 s to 1/100,000 s
Slow Shutter	Yes
Day & Night	IR cut filter
WDR	120 dB
Angle Adjustment	Pan: -60° to 60°, tilt: 10° to 90°
Lens	
Lens Type	Varifocal lens, 2.8 to 8 mm
Aperture	F1.9
Focus	Manual, semi-auto
FOV	Horizontal FOV 100° to 49°, vertical FOV 72° to 36.4°, diagonal FOV 134.4° to 61.4°
Lens Mount	Φ14
Illuminator	
IR Range	Up to 30 m
Wavelength	850 nm
Video	
Max. Resolution	2560 × 1920
Video Stream	3 defined streams
Main Stream	50Hz: 25fps (2560 × 1920, 2048 × 1536, 1920 × 1080, 1280 × 720) 60Hz: 24fps (2560 × 1920, 2048 × 1536,1920 × 1080, 1280 × 720)
Sub Stream	50Hz: 25fps (704 × 576, 640 × 480) 60Hz: 24fps (704 × 480, 640 × 480)
Third Stream	50Hz: 6fps (1920 × 1080, 1280 × 720, 704 × 576, 640 × 480) 60Hz: 8fps (1920 × 1080, 1280 × 720, 704 × 480, 640 × 480)
Video Compression	Main stream: H.265+/H.265/H.264+/H.264 Sub stream: H.265/H.264/MJPEG Third stream: H.265/H.264
H.264 Type	Baseline Profile/Main Profile/High Profile
H.264+	Main stream support
H.265 Type	Main Profile
H.265+	Main stream support
Video Bit Rate	32 Kbps to 16 Mbps
Scalable Video Coding (SVC)	H.264 encoding

Audio (-S)	
Audio Compression	G.711/G.722.1/G.726/MP2L2/PCM
Audio Bit Rate	64Kbps(G.711)/16Kbps(G.722.1)/16Kbps(G.726)/32-192Kbps(MP2L2)/32Kbps(PCM)
Environment Noise Filtering	Yes
Audio Sampling Rate	8 kHz/16 kHz/32 kHz/44.1 kHz/48 kHz
Smart Feature-Set	
Smart Event	Line crossing detection, up to 4 lines configurable Intrusion detection, up to 4 regions configurable Region entrance detection, up to 4 regions configurable Region exiting detection, up to 4 regions configurable Unattended baggage detection, up to 4 regions configurable Object removal detection, up to 4 regions configurable Scene change detection, audio exception detection (-S), defocus detection
Basic Event	Motion detection, video tampering alarm, exception (network disconnected, IP address conflict, illegal login, HDD full, HDD error)
Linkage Method	Upload to FTP/NAS/memory card, notify surveillance center, send email, trigger alarm output, trigger recording, trigger capture
Region of Interest	4 fixed regions and dynamic face tracking for each stream
Image	
Image Enhancement	BLC, HLC, 3D DNR, Defog, EIS
Image Setting	Rotate mode, saturation, brightness, contrast, sharpness, AGC, and white balance are adjustable by client software or web browser
Target Cropping	Yes
Day/Night Switch	Day/Night/Auto/Schedule/Triggered by Alarm In (-S)
Picture Overlay	LOGO picture can be overlaid on video with 128 × 128 24 bit bmp format
SNR	≥52dB
Network	
Network Storage	microSD/SDHC/SDXC card (128 GB), local storage and NAS (NFS,SMB/CIFS), ANR
Protocols	TCP/IP, ICMP, HTTP, HTTPS, FTP, DHCP, DNS, DDNS, RTP, RTSP, RTCP, PPPoE, NTP, UPnP, SMTP, SNMP, IGMP, 802.1X, QoS, IPv6, UDP, Bonjour
API	ONVIF (PROFILE S, PROFILE G, PROFILE T), ISAPI, SDK, Ehome
Security	Password protection, complicated password, HTTPS encryption, 802.1X authentication (EAP-MD5), watermark, IP address filter, basic and digest authentication for HTTP/ HTTPS, WSSE and digest authentication for ONVIF
Simultaneous Live View	Up to 20 channels
User/Host	Up to 32 users. 3 user levels: administrator, operator and user
Client	iVMS-4200, Hik-Connect, Hik-Central
Web Browser	IE8+, Chrome41.0-44, Firefox30.0-51, Safari8.0-11

Interface	
Audio (-S)	1 input (line in), 1 output (line out), mono sound
Communication Interface	1 RJ45 10M/100M/1000M Ethernet port; built-in RS232 -S model: 1 RS-485 interface (half duplex, HIKVISION, Pelco-P, Pelco-D, self-adaptive)
Alarm (-S)	2 inputs, 2 outputs (max. 24 VDC, 1A)
On-board Storage	Built-in microSD/SDHC/SDXC slot, up to 128 GB
General	
Firmware Version	V5.5.32
Web Client Language	32 languages English, Russian, Estonian, Bulgarian, Hungarian, Greek, German, Italian, Czech, Slovak, French, Polish, Dutch, Portuguese, Spanish, Romanian, Danish, Swedish, Norwegian, Finnish, Croatian, Slovenian, Serbian, Turkish, Korean, Traditional Chinese, Thai, Vietnamese, Japanese, Latvian, Lithuanian, Portuguese (Brazil)
General Function	Anti-flicker, 3 streams, heartbeat, mirror, privacy masks
Reset	Reset via reset button on camera body, web browser and client software
Startup and Operating Conditions	-30 °C to 60 °C (-22 °F to 140 °F), humidity 95% or less (non-condensing)
Storage Conditions	-30 °C to 60 °C (-22 °F to 140 °F), humidity 95% or less (non-condensing)
Power Supply	12 VDC± 20%, reverse polarity protection; three-core terminal block 24 VAC ± 20%; PoE (802.3at, class 4)
Power Consumption and Current	12 VDC, 1.8 A, 22 W 24 VAC, 1.4 A, 22 W PoE (802.3at, 42.5 to 57 VDC), 0.43 to 0.32 A, 19 W, class 4
Material	Bubble & IR cover: plastic, camera: metal
Dimensions	Camera: Φ250 × 113 mm (9.8" × 4.4") Package: 336 × 261 × 293 mm (13.2" × 10.3" × 11.5")
Weight	Camera: 2.125 kg (4.7 lb); with package: 3.899 kg (8.6 lb)
Approval	
EMC	47 CFR Part 15, Subpart B; EN 55032: 2015, EN 61000-3-2: 2014, EN 61000-3-3: 2013, EN 50130-4: 2011 +A1: 2014; AS/NZS CISPR 32: 2015; ICES-003: Issue 6, 2016; KN 32: 2015, KN 35: 2015
Safety	UL 60950-1, IEC 60950-1:2005 + Am 1:2009 + Am 2:2013, EN 60950-1:2005 + Am 1:2009 + Am 2:2013, IS 13252(Part 1):2010+A1:2013+A2:2015
Chemistry	2011/65/EU, 2012/19/EU, Regulation (EC) No 1907/2006
Protection	Ingress protection: IK10 (IEC 62262:2002), IP67 (IEC 60529-2013)

* *Listed resolutions are only selectable options. It does not mean that all streams can work at their maximum resolution at the same time.*

Available Model

DS-2CD6D54G1-IZ(2.8 to 8 mm), DS-2CD6D54G1-IZS(2.8 to 8 mm)

Dimension

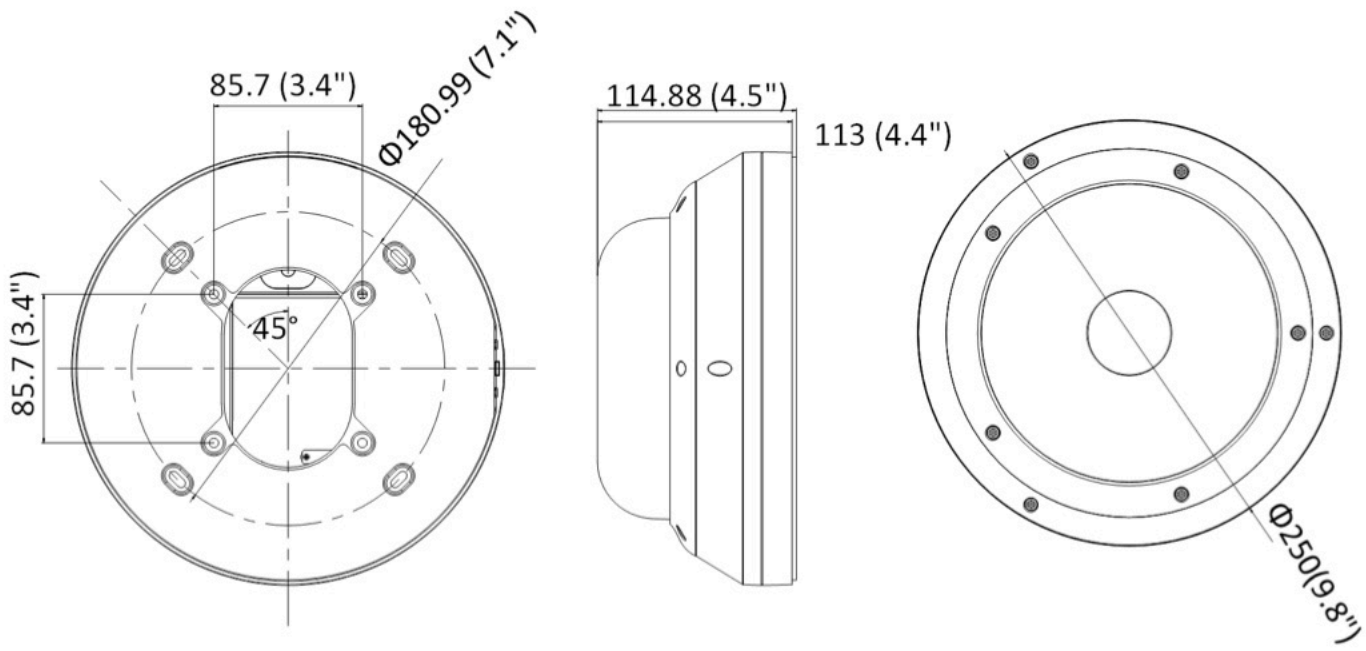

Unit: mm(inch)

Accessory

DS-1618ZJ-6D
Wall Mount

DS-1661ZJ-6D
Pendant Mount

Distributed by

Headquarters
No.555 Qianmo Road, Binjiang District,
Hangzhou 310051, China
T +86-571-8807-5998
overseasbusiness@hikvision.com

Hikvision USA
T +1-909-895-0400
sales.usa@hikvision.com

Hikvision Australia
T +61-2-8599-4233
salesau@hikvision.com

Hikvision India
T +91-22-28469900
sales@pramahikvision.com

Hikvision Canada
T +1-866-200-6690
sales.canada@hikvision.com

Hikvision Thailand
T +662-275-9949
sales.thailand@hikvision.com

Hikvision Europe
T +31-23-5542770
sales.eu@hikvision.com

Hikvision Italy
T +39-0438-6902
info.it@hikvision.com

Hikvision Brazil
T +55 11 3318-0050
Latam.support@hikvision.com

Hikvision Turkey
T +90 (216)521 7070- 7074
sales.tr@hikvision.com

Hikvision Malaysia
T +601-7652-2413
sales.my@hikvision.com

Hikvision UK & Ireland
T +01628-902140
sales.uk@hikvision.com

Hikvision South Africa
Tel: +27 (10) 0351172
sale.africa@hikvision.com

Hikvision France
T +33(0)1-85-330-450
info.fr@hikvision.com

Hikvision Kazakhstan
T +7-727-9730667
nikia.panfilov@hikvision.ru

Hikvision Vietnam
T +84-974270888
sales.vt@hikvision.com

Hikvision UAE
T +971-4-4432090
salesme@hikvision.com

Hikvision Singapore
T +65-6684-4718
sg@hikvision.com

Hikvision Spain
T +34-91-737-16-55
info.es@hikvision.com

Hikvision Tashkent
T +99-87-1238-9438
uzb@hikvision.ru

Hikvision Hong Kong
T +852-2151-1761
info.hk@hikvision.com

Hikvision Russia
T +7-495-669-67-99
saleru@hikvision.com

Hikvision Korea
T +82-(0)31-731-8817
sales.korea@hikvision.com

Hikvision Poland
T +48-22-460-01-50
info.pl@hikvision.com

Hikvision Indonesia
T +62-21-2933759
Sales.Indonesia@hikvision.com

Hikvision Colombia
sales.colombia@hikvision.com

© Hikvision Digital Technology Co., Ltd. 2019 | Data subject to change without notice |